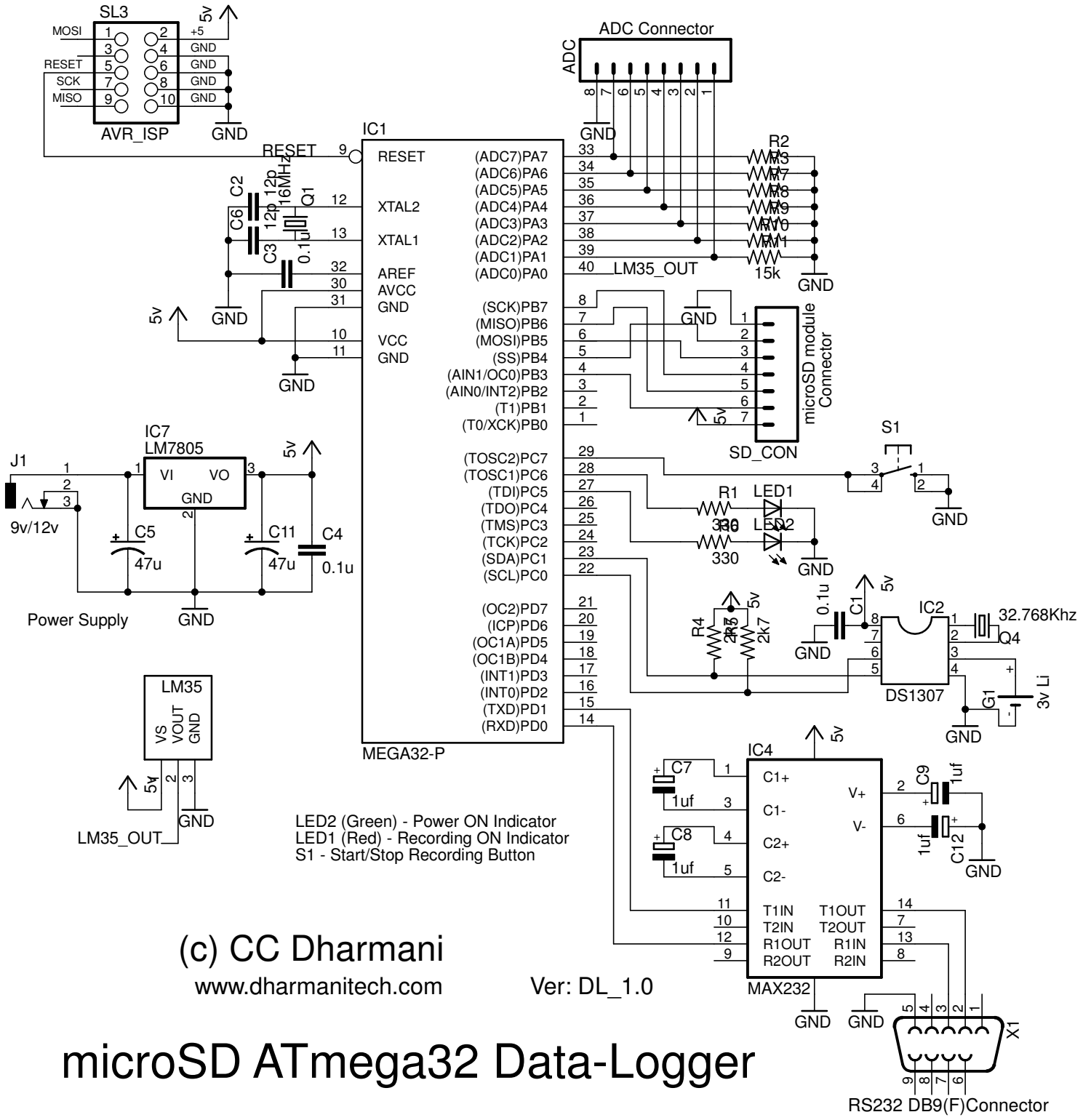
SL3
MOSI
RESET
SCK
MISO
AVR_ISP
GND
5v
ADC Connector
ADC
IC1
RESET
XTAL2
XTAL1
AREF
AVCC
GND
VCC
GND
(ADC7)PA7
(ADC6)PA6
(ADC5)PA5
(ADC4)PA4
(ADC3)PA3
(ADC2)PA2
(ADC1)PA1
(ADC0)PA0
LM35_OUT
(SCK)PB7
(MISO)PB6
(MOSI)PB5
(SS)PB4
(AIN1/OC0)PB3
(AIN0/INT2)PB2
(T1)PB1
(T0/XCK)PB0
(TOSC2)PC7
(TOSC1)PC6
(TDI)PC5
(TDO)PC4
(TMS)PC3
(TCK)PC2
(SDA)PC1
(SCL)PC0
(OC2)PD7
(ICP)PD6
(OC1A)PD5
(OC1B)PD4
(INT1)PD3
(INT0)PD2
(TXD)PD1
(RXD)PD0
MEGA32-P
C2
12p
C6
12p
16MHz
Q1
C3
0.1u
R2
15k
microSD module Connector
SD_CON
S1
R1
330
LED1
LED2
IC7
LM7805
VI
VO
GND
J1
9v/12v
C5
47u
C11
47u
C4
0.1u
Power Supply
LM35
VS
VOUT
GND
LM35_OUT
R4
2k7
R5
2k7
C1
0.1u
IC2
DS1307
32.768Khz
Q4
G1
3v Li
IC4
MAX232
C1+
C1-
C2+
C2-
V+
V-
T1IN
T2IN
R1OUT
R2OUT
T1OUT
T2OUT
R1IN
R2IN
C7
1uf
C8
1uf
C9
1uf
C12
1uf
X1
RS232 DB9(F)Connector
LED2 (Green) - Power ON Indicator
LED1 (Red) - Recording ON Indicator
S1 - Start/Stop Recording Button
(c) CC Dharmani
www.dharmanitech.com
Ver: DL_1.0
microSD ATmega32 Data-Logger